THE FERGIE

LIFECARE | HOSPITALITY | RESIDENTIAL

An elegant design featuring tufted backs and bench style seats and sleek, thin arms.

A solid frame made from New Zealand kiln dried and engineered, sustainable timbers as well as first class componentry.

The perfect sustainable, New Zealand foams chosen based on which sit fits the model best.

Choose timber leg stains and finish off with your choice of fabric or leather.

CONSULT

QUOTE

PLAN

PROTOTYPE

CRAFT

DELIVER

AFTERCARE

DIMENSIONS

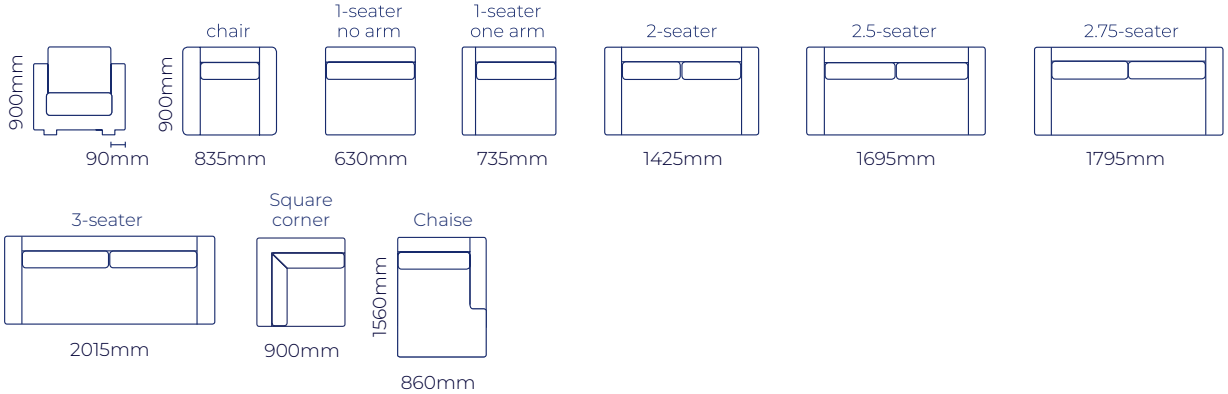

All sofas are available with no arm, one arm or two arms.
Due to the nature of foam and fabric all furniture dimensions could be +/- 20mm.
In a square corner setting the corner piece is always 'built on' to the smaller of the two sofas specified, i.e. 2 + cnr + 3, the corner will be built on to the 2 str.

LEG STAINS

Natural | Rimu | Walnut

Wenge | Whitewash | Greywash

Chrome | Gunmetal | Matt black

WARRANTY

Timber frame: 5-years **Seat foam:** 5-years
Seat webbing: 5-years **Back inners:** 2-years
Fabric: Refer to supplier

ejp COMMERCIAL PROJECTS

www.ejpcommercial.co.nz
sales@ejpcommercial.co.nz | 09 570 6670
7-9 Alfred St, Onehunga, Auckland

NEW ZEALAND MADE